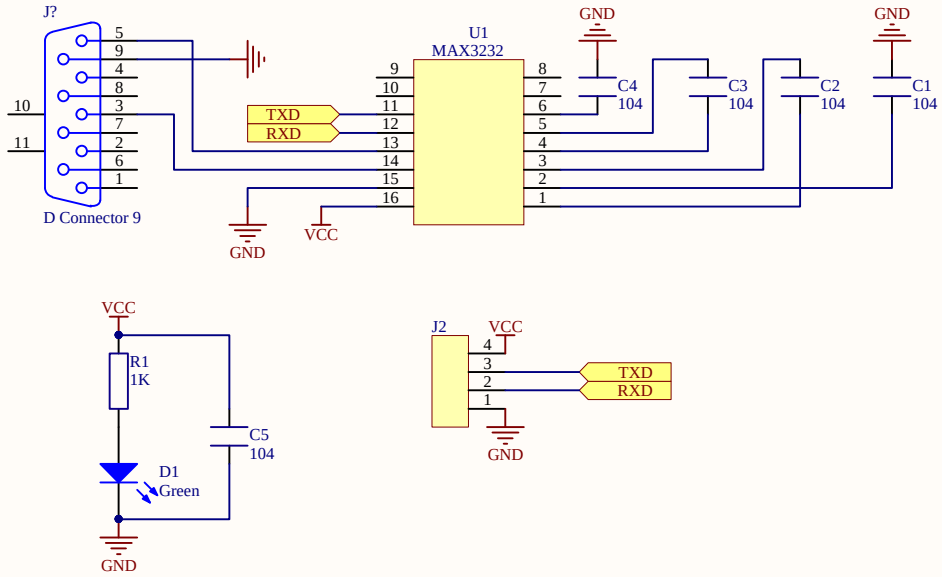
J?
D Connector 9
U1
MAX3232
TXD
RXD
GND
VCC
C4
104
C3
104
C2
104
C1
104
R1
1K
C5
104
D1
Green
J2