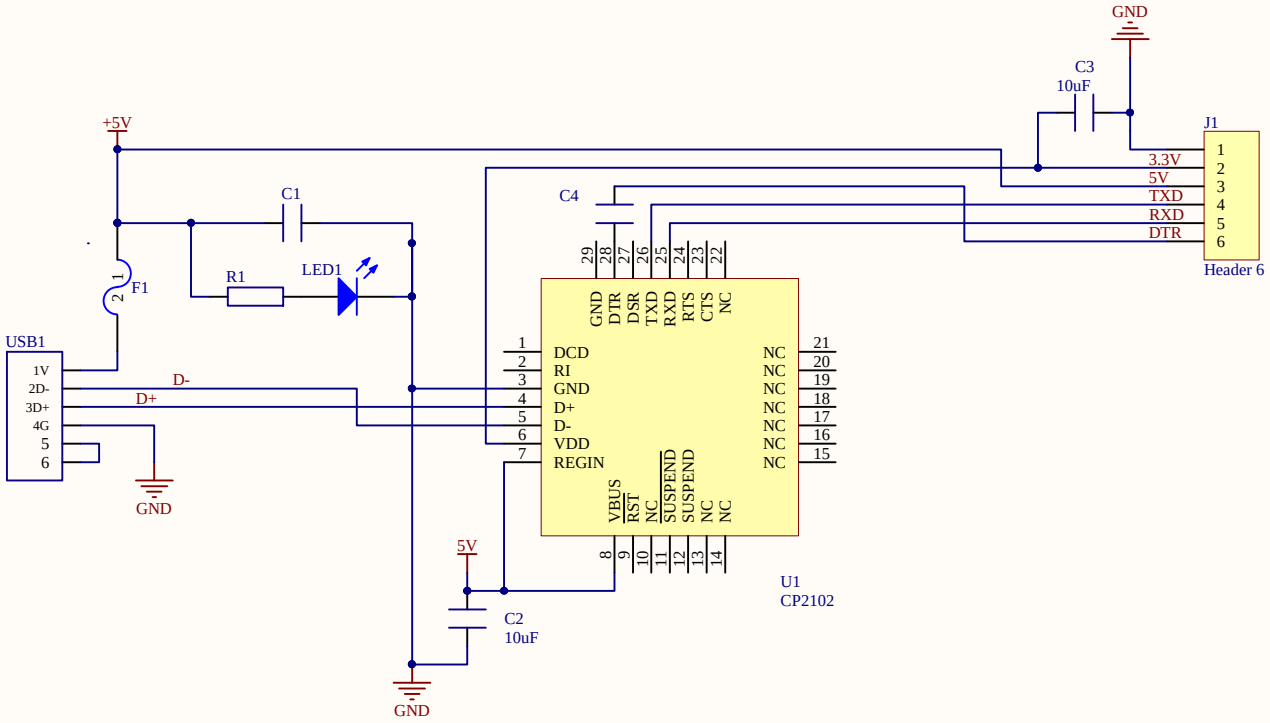

RobotDyn
www.robotdyn.com

USB TTL CP2102